Waves

4. Wave Loading On Structures

Wave Loading on Structures

4. WAVE LOADING ON STRUCTURES

4.1 Pressure distribution

4.2 Surface-piercing structure

4.3 Fully-submerged structure

4.4 Loads on a vertical (caisson-type) breakwater

Wave Pressure Forces

Pressure force: sum of (pressure x area) $\int p \, \mathrm{d}A$

per unit width: $\int p \, \mathrm{d}z$

Pressure distribution (progressive wave):

$$p = \underbrace{-\rho g z}_{\text{hydrostatic}} \underbrace{-\rho \frac{\partial \phi}{\partial t}}_{\text{wave}} = -\rho g z + \rho g A \frac{\cosh k(h+z)}{\cosh kh} \cos(kx - \omega t)$$

Wave component of pressure, with **reflection** (standing wave):

$$p = 2\rho g A \frac{\cosh k(h+z)}{\cosh kh} \cos kx \cos \omega t$$

Wave Pressure Forces

Maximum pressure at the structure:

$$p = \rho g H \frac{\cosh k(h+z)}{\cosh kh}$$

- $H\ (= 2A)$ is the **height of the incident wave**
- With reflection, $\eta_{\max} = 2A = H$ is also the **maximum crest height** above SWL.

Wave Loading on Structures

4. WAVE LOADING ON STRUCTURES

4.1 Pressure distribution

4.2 Surface-piercing structure

4.3 Fully-submerged structure

4.4 Loads on a vertical (caisson-type) breakwater

Surface-Piercing Structure

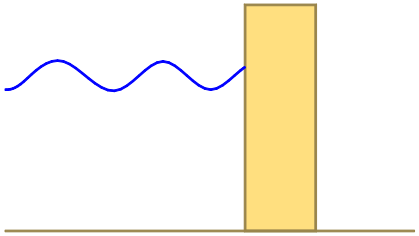

$$p = \rho g H \frac{\cosh k(h+z)}{\cosh kh}$$

$$F = \int p \, \mathrm{d}z \quad = \frac{\rho g H}{\cosh kh} \int_{z=-h}^{0} \cosh k(h+z) \; \mathrm{d}z$$

$$= \frac{\rho g H}{\cosh kh} \left[\frac{\sinh k(h+z)}{k} \right]_{-h}^{0}$$

$$= \frac{\rho g H \sinh kh}{k \cosh kh}$$

$$F = \frac{\rho g H \tanh kh}{k}$$

Shallow water: $F = \rho g H h$ (hydrostatic)

Deep water: $F = \dfrac{\rho g H}{k}$ (independent of depth)

Wave Loading on Structures

4. WAVE LOADING ON STRUCTURES

4.1 Pressure distribution

4.2 Surface-piercing structure

4.3 Fully-submerged structure

4.4 Loads on a vertical (caisson-type) breakwater

Fully-Submerged Structure

$$F = \int p \, \mathrm{d}z \quad = \frac{\rho g H}{\cosh kh} \int_{z=-h}^{-(h-B)} \cosh k(h+z) \; \mathrm{d}z$$

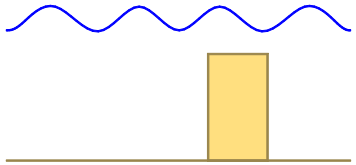

$$F = \frac{\rho g H \sinh kB}{k \cosh kh}$$

This is always less than the surface-piercing case

Wave Loading on Structures

4. WAVE LOADING ON STRUCTURES

4.1 Pressure distribution

4.2 Surface-piercing structure

4.3 Fully-submerged structure

4.4 Loads on a vertical (caisson-type) breakwater

Breakwater Types

- Rubble-mound
- Caisson
- Floating

Rubble-Mound Breakwater

Caisson Breakwater

Floating Breakwater

Wave Loading: Design Approximation

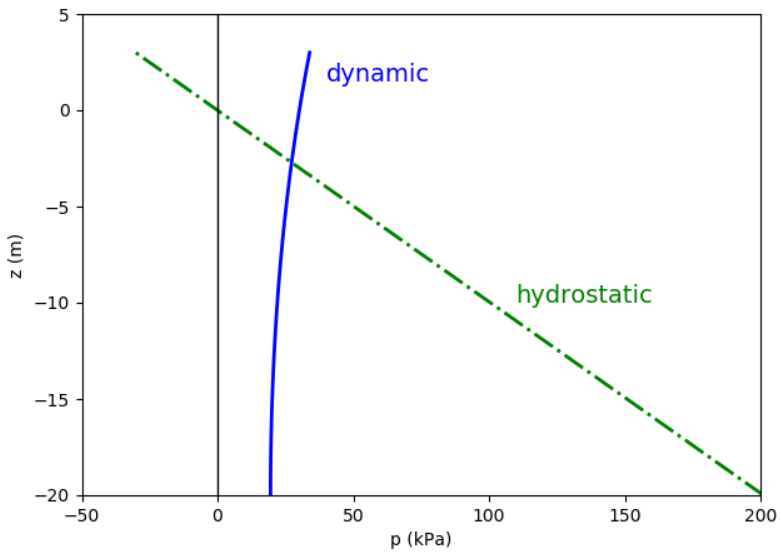

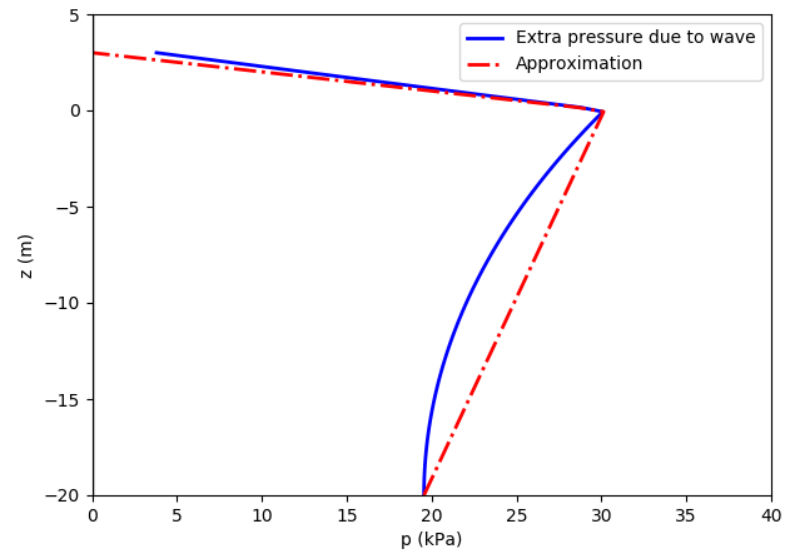

$$= \underbrace{-\rho g z}_{\text{hydrostatic}} \quad \underbrace{+\rho g H \frac{\cosh k(h+z)}{\cosh kh}}_{\text{wave}}$$

Approximation for excess pressure:

- **hydrostatic** from wave crest down to SWL;
- **linear** between SWL and bed.

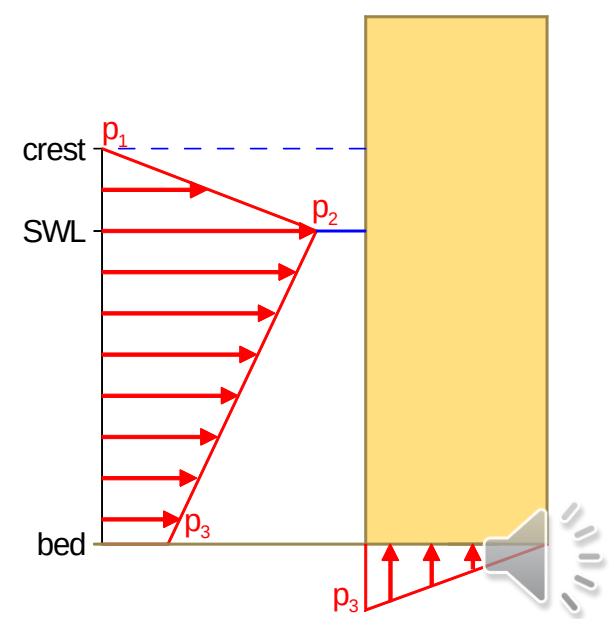

Wave Loading: Design Approximation

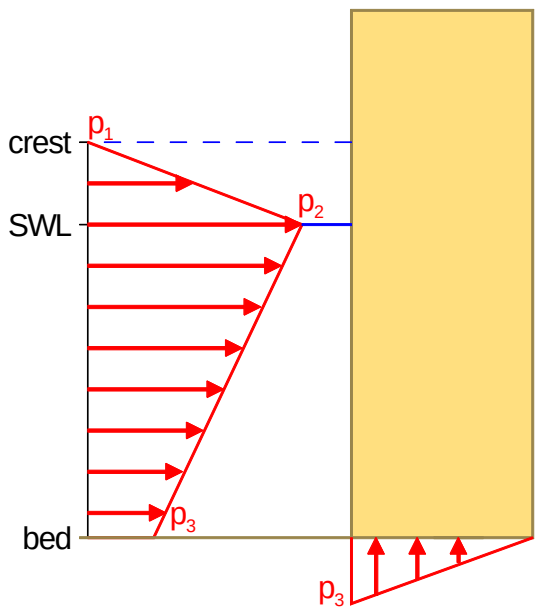

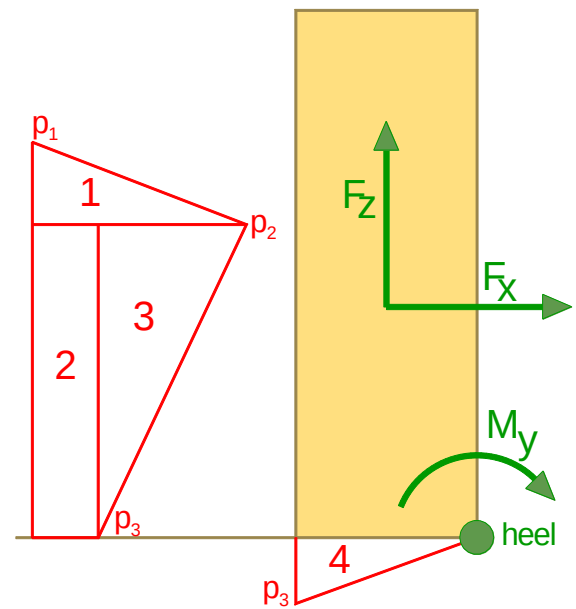

$$p_1 = 0$$

$$p_2 = \rho g H$$

$$p_3 = \frac{\rho g H}{\cosh kh}$$

Wave Loading: Design Approximation

$$p_1 = 0$$

$$p_2 = \rho g H$$

$$p_3 = \frac{\rho g H}{\cosh kh}$$

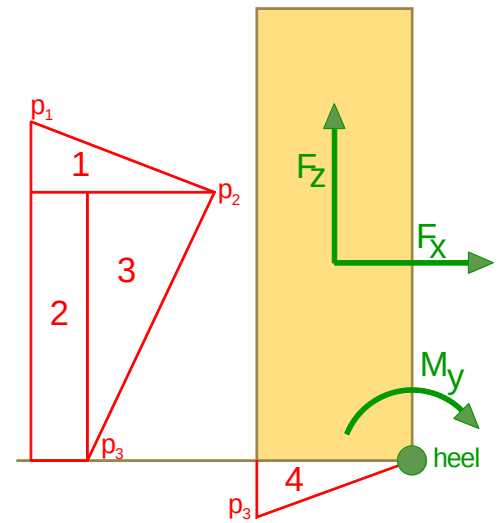

Force	moment arm
$F_{1x} = \frac{1}{2} p_2 H$	$z_1 = h + \frac{1}{3} H$
$F_{2x} = p_3 h$	$z_2 = \frac{1}{2} h$
$F_{3x} = \frac{1}{2}(p_2 - p_3) h$	$z_3 = \frac{2}{3} h$
$F_{4z} = \frac{1}{2} p_3 b$	$x_4 = \frac{2}{3} b$

Horizontal **force** (per unit width):

$$F_x = F_{1x} + F_{2x} + F_{3x}$$

Overturning **moment** (per unit width):

$$M = F_{1x} z_1 + F_{2x} z_2 + F_{3x} z_3 \ \ (+F_{4z} x_4)$$

Example

A regular wave of period 8 s and height 1.2 m is normally incident to a caisson-type breakwater of 4 m breadth and located in water depth of 5 m. Using linear theory, determine the following:

(a) Caisson height required for 1 m freeboard above the peak wave elevation at the breakwater.

(b) Maximum wave-induced horizontal force per metre of wave crest.

(c) Maximum wave-induced overturning moment per metre of wave crest.

A regular wave of period 8 s and height 1.2 m is normally incident to a caisson-type breakwater of 4 m breadth and located in water depth of 5 m. Using linear theory, determine the following:

(a) Caisson height required for 1 m freeboard above the peak wave elevation at the breakwater.

Approach wave amplitude: $A = H/2$ $\quad H = 1.2\ \mathrm{m}$

With reflection: $2A = H$

Add water depth (5 m) and freeboard (1 m):

$$\text{caisson height} = 5 + 1.2 + 1 \quad = 7.2\ \mathrm{m}$$

A regular wave of period 8 s and height 1.2 m is normally incident to a caisson-type breakwater of 4 m breadth and located in water depth of 5 m. Using linear theory, determine the following:

(b) Maximum wave-induced horizontal force per metre of wave crest.

(c) Maximum wave-induced overturning moment per metre of wave crest.

$$h = 5 \text{ m}$$

$$T = 8 \text{ s}$$

$$\omega = \frac{2\pi}{T} = 0.7854 \text{ rad s}^{-1}$$

$$p_1 = 0$$

$$p_2 = \rho g H$$

$$p_3 = \frac{\rho g H}{\cosh kh}$$

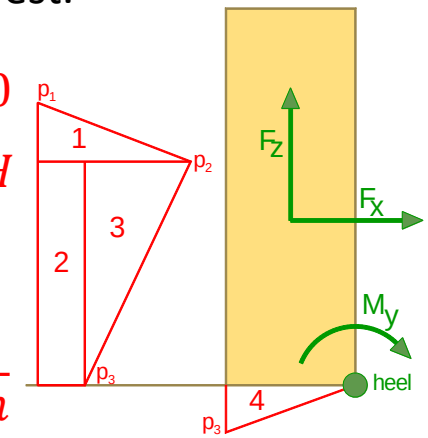

$$\omega^2 = gk \tanh kh$$

$$\frac{\omega^2 h}{g} = kh \tanh kh$$

$$0.3144 = kh \tanh kh$$

$$kh = \frac{0.3144}{\tanh kh} \quad \text{or} \quad kh = \frac{1}{2}\left(kh + \frac{0.3144}{\tanh kh}\right)$$

$$kh = 0.5918$$

A regular wave of period 8 s and height 1.2 m is normally incident to a caisson-type breakwater of 4 m breadth and located in water depth of 5 m. Using linear theory, determine the following:

(b) Maximum wave-induced horizontal force per metre of wave crest.

(c) Maximum wave-induced overturning moment per metre of wave crest.

$p_1 = 0$

$p_2 = 12070 \text{ Pa}$

$P_3 = 10220 \text{ Pa}$

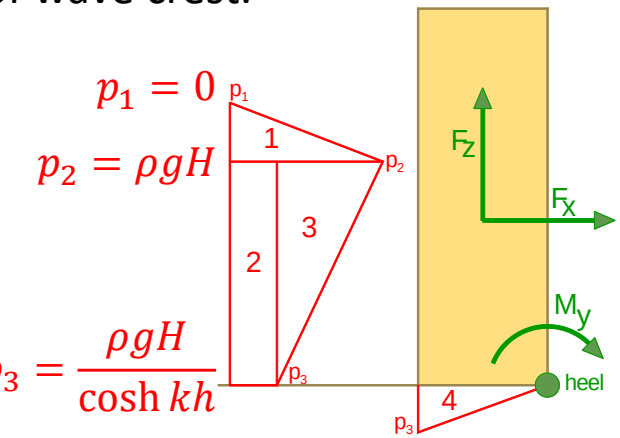

$p_1 = 0$

$p_2 = \rho g H$

$p_3 = \dfrac{\rho g H}{\cosh kh}$

Region	Force per metre (N/m)	Moment arm (m)
1	$F_{x1} = \frac{1}{2} p_2 \times H \quad = 7242$	$z_1 = h + \frac{1}{3} H \quad = 5.4$
2	$F_{x2} = p_3 \times h \quad = 51100$	$z_2 = \frac{1}{2} h \quad = 2.5$
3	$F_{x3} = \frac{1}{2}(p_2 - p_3) \times h \quad = 4625$	$z_3 = \frac{2}{3} h \quad = 3.333$
4	$F_{z4} = \frac{1}{2} p_3 \times b \quad = 20440$	$x_4 = \frac{2}{3} b \quad = 2.667$

$\rho = 1025 \text{ kg m}^{-3}$

$H = 1.2 \text{ m}$

$kh = 0.5918$

$b = 4 \text{ m}$

Horizontal force: $F_{x1} + F_{x2} + F_{x3} \quad = \mathbf{62970 \text{ N/m}}$

Turning moment: $F_{x1} z_1 + F_{x2} z_2 + F_{x3} z_3 + F_{z4} x_4 \quad = \mathbf{236800 \text{ N m/m}}$