4.1 Pressure Distribution

The pressure force (pressure × area) on a structure such as a breakwater is

$$\int p \, \mathrm{d}A$$

or, per unit width,

$$\int p \, \mathrm{d}z$$

where the integral is over the submerged depth of the structure (which may be surface-piercing or fully submerged).

For a progressive wave the pressure distribution has hydrostatic and wave components:

$$p = \underbrace{-\rho g z}_{\text{hydrostatic}} \underbrace{-\rho \frac{\partial \phi}{\partial t}}_{\text{wave}} \qquad = -\rho g z + \rho g A \frac{\cosh k(h+z)}{\cosh kh} \cos(kx - \omega t)$$

but here we are only interested in the dynamic component, as the hydrostatic force is a static contribution equal (at least below the SWL) to that in still water.

Assuming total reflection (the worst case) the dynamic pressure component for an incident regular wave $\eta = A\cos(kx - \omega t)$ is

$$\begin{aligned} p &= \rho g A \frac{\cosh k(h+z)}{\cosh kh} \{\cos(kx - \omega t) + \cos(-kx - \omega t)\} \\ &= 2\rho g A \frac{\cosh k(h+z)}{\cosh kh} \cos kx \cos \omega t \end{aligned}$$

and hence the maximum wave pressure over a cycle at $x = 0$ is

$$p = \rho g H \frac{\cosh k(h+z)}{\cosh kh}$$

where H $(= 2A)$ is the height of the *incident* wave. (Since the water surface elevation due to incident plus reflected waves has amplitude $\eta_{\max} = 2A = H$, then H is also the maximum crest height above SWL.)

4.2 Surface-Piercing Structure

The maximum wave pressure force per unit width is (with the linear-wave-theory approximation $\eta \ll h$, so that the upper limit of integration can be taken as 0 rather than η):

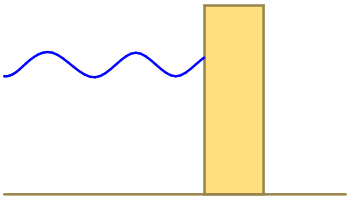

$$F = \int p \, \mathrm{d}z \qquad = \frac{\rho g H}{\cosh kh} \int_{z=-h}^{0} \cosh k(h+z) \; \mathrm{d}z$$

$$= \frac{\rho g H}{\cosh kh} \left[\frac{\sinh k(h+z)}{k} \right]_{-h}^{0}$$

$$= \frac{\rho g H \sinh kh}{k \cosh kh}$$

Hence,

$$F = \frac{\rho g H \tanh kh}{k}$$

In the shallow-water limit ($\tanh kh \sim kh$):

$$F = \rho g H h$$

This is essentially hydrostatic; (constant excess wave pressure $\rho g H$ over depth h).

In the deep-water limit ($\tanh kh \to 1$):

$$F = \frac{\rho g H}{k}$$

This is independent of depth (because the wave disturbance does not extend the whole way to the bed).

4.3 Fully-Submerged Structure

The only change is that the upper limit of integration is $-(h-B)$, where B is the height of the structure. The maximum wave pressure force per unit width is

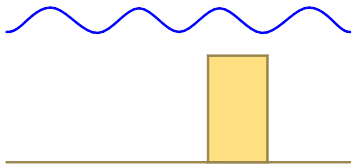

$$F = \int p \, \mathrm{d}z \quad = \frac{\rho g H}{\cosh kh} \int_{z=-h}^{-(h-B)} \cosh k(h+z) \; \mathrm{d}z$$

$$= \frac{\rho g H \sinh kB}{k \cosh kh}$$

This is always less than the surface-piercing case (since $\sinh kB < \sinh kh$).

4.4 Loads on a Vertical (Caisson-Type) Breakwater

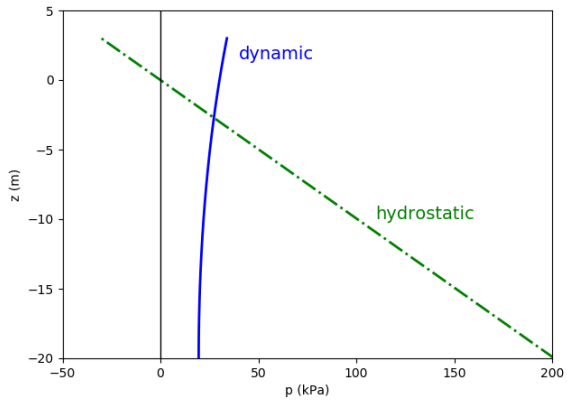

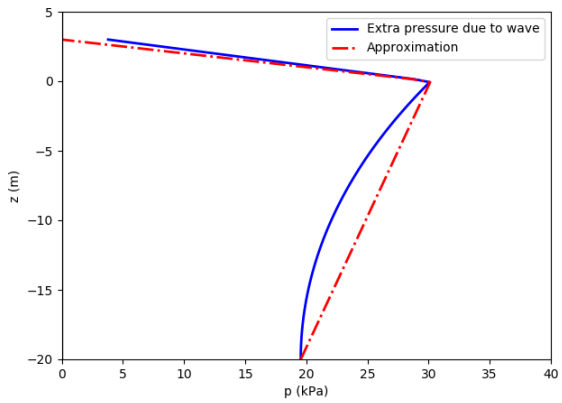

As we can see from the plots above, a conservative approach (i.e., one which tends to overestimate pressure on the structure) is to assume that the excess pressure over that which would exist in the absence of waves is (see diagram):

- hydrostatic in the wave crest above the SWL;
- varies linearly with depth between the wave pressures at the SWL and the bed.

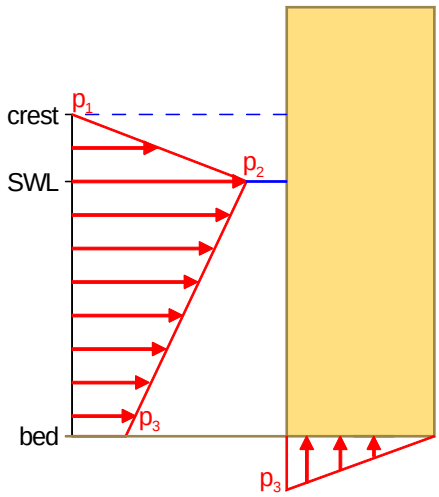

Additionally, if water can get underneath the breakwater (porous foundation) there may be upthrust due to wave-induced pressure, which contributes to the overturning moment about the back heel of the structure. For this, assume a linear distribution between the bed pressure at the front and zero at the back (see diagrams).

For a surface-piercing structure, the force distribution can be broken down into:

1: triangular pressure distribution above SWL;

2, 3: uniform + triangular pressure distributions bed to SWL;

and, if water can get underneath the breakwater:

4: triangular distribution pressure distribution below.

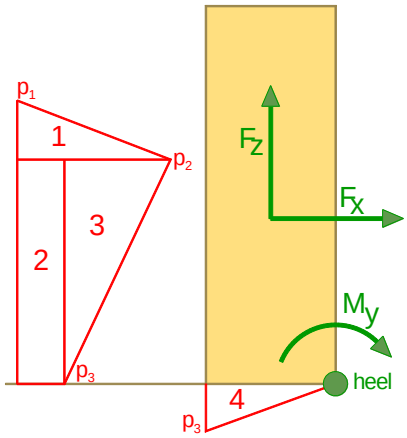

The relevant pressures are:

$$p_1 = 0$$

$$p_2 = \rho g H$$

$$p_3 = \frac{\rho g H}{\cosh kh}$$

The forces and moment arms are, per unit length of breakwater:

Force	moment arm
$F_{1x} = \frac{1}{2} p_2 H$	$z_1 = h + \frac{1}{3} H$
$F_{2x} = p_3 h$	$z_2 = \frac{1}{2} h$
$F_{3x} = \frac{1}{2}(p_2 - p_3) h$	$z_3 = \frac{2}{3} h$
$F_{4z} = \frac{1}{2} p_3 b$	$x_4 = \frac{2}{3} b$

The net horizontal force (per unit length of breakwater) is

$$F_{1x} + F_{2x} + F_{3x}$$

The net overturning moment (per unit length of breakwater) about the heel is

$$F_{1x} z_1 + F_{2x} z_2 + F_{3x} z_3 \ \ (+F_{4z} x_4)$$

with the last term only applying for porous foundation.

For a fully-submerged structure we can perform a similar breakdown of forces with a similar piecewise-linear pressure distribution, but in this instance we only need the following pressures:

$$p_{\mathrm{SWL}} = \rho g H$$

$$p_{\mathrm{bed}} = \frac{\rho g H}{\cosh kh}$$

and, by interpolation,

$$p_{\mathrm{top}} = p_{\mathrm{bed}} + \frac{B}{h}(p_{\mathrm{SWL}} - p_{\mathrm{bed}})$$

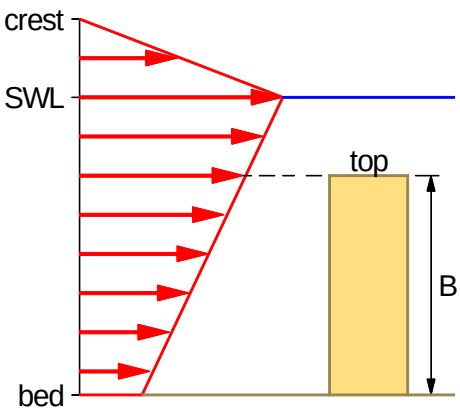

Example.
A regular wave of period 8 s and height 1.2 m is normally incident to a caisson-type breakwater of 4 m breadth and located in water depth of 5 m. Using linear theory, determine the following:

(a) Caisson height required for 1 m freeboard above the peak wave elevation at the breakwater.

(b) Maximum wave-induced horizontal force per metre of wave crest.

(c) Maximum wave-induced overturning moment per metre of wave crest.

(a) Peak wave elevation of a reflected wave above the SWL is $2A$, i.e. H. Hence caisson height required is

$$\text{water depth} + \text{wave elevation} + \text{freeboard} = 5 + 1.2 + 1 \quad = 7.2 \text{ m}$$

Answer: caisson height = 7.2 m

(b), (c) Wave properties:

$$h = 5 \text{ m}$$

$$T = 8 \text{ s}$$

$$\omega = \frac{2\pi}{T} \quad = 0.7854 \text{ rad s}^{-1}$$

The dispersion relation is

$$\omega^2 = gk \tanh kh$$

$$\Rightarrow \quad \frac{\omega^2 h}{g} = kh \tanh kh$$

$$\Rightarrow \quad 0.3144 = kh \tanh kh$$

Since the LHS is small this may be iterated as

$$kh = \frac{1}{2}\left(kh + \frac{0.3144}{\tanh kh}\right)$$

to give

$$kh = 0.5918$$

Approximate the wave-induced pressure distribution as shown in the figure below.

Pressures:

$$p_1 = 0$$

$$p_2 = \rho g H \quad = 1025 \times 9.81 \times 1.2 \quad = 12070 \text{ Pa}$$

$$P_3 = \frac{\rho g H}{\cosh kh} \quad = \frac{p_2}{\cosh 0.5918} \quad = 10220 \text{ Pa}$$

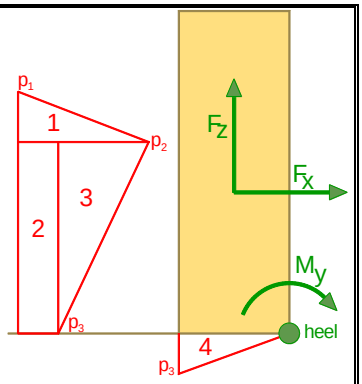

Decompose the pressure forces on the breakwater as shown. Relevant dimensions are:

$$h = 5 \text{ m}$$

$$H = 1.2 \text{ m}$$

$$b = 4 \text{ m}$$

Region	Force, F_x or F_z	Moment arm
1	$F_{x1} = \frac{1}{2} p_2 \times H \quad = 7242 \text{ N/m}$	$z_1 = h + \frac{1}{3} H \quad = 5.4 \text{ m}$
2	$F_{x2} = p_3 \times h \quad = 51100 \text{ N/m}$	$z_2 = \frac{1}{2} h \quad = 2.5 \text{ m}$
3	$F_{x3} = \frac{1}{2}(p_2 - p_3) \times h \quad = 4625 \text{ N/m}$	$z_3 = \frac{2}{3} h \quad = 3.333 \text{ m}$
4	$F_{z4} = \frac{1}{2} p_3 \times b \quad = 20440 \text{ N/m}$	$x_4 = \frac{2}{3} b \quad = 2.667 \text{ m}$

Horizontal force:

$$F_{x1} + F_{x2} + F_{x3} = 62970 \text{ N /m}$$

The sum of all clockwise moments about the heel:

$$F_{x1} z_1 + F_{x2} z_2 + F_{x3} z_3 + F_{z4} x_4 = 236800 \text{ N m/m}$$

Answer: force = 63.0 kN /m; overturning moment = 237 kN m /m