1. Notes on the software
2. Assigned exercise (submission via Blackboard; deadline: Tuesday 13th February, 6 pm)

---

1. NOTES ON THE SOFTWARE

`STAR-CCM+` generates a single simulation file (type `.sim`). You are advised to save this initially on the local disk, not your P-drive or USB drive, as these are slow to access. It can be copied elsewhere afterwards.

1.1 Typical Steps in a Simulation

0. Start server process (`[File]` ↓ `New Simulation`)

1. Create a CAD model (`Geometry > 3D-CAD Models` → `New`)

2. Create computational geometry
- **2.1 Create a geometry part** (*CAD model* → `New Geometry Part`)
- **2.2 Create a region** (`Geometry >` *part* → `Assign Parts to Regions`)
- **2.3 Define boundary <u>types</u>** (`Regions >` *region* `> Boundaries`)

3. Generate a mesh (automated, parts-based meshing)
- **3.1 Set up** (`Geometry > Operations` → `New > Automated Mesh`)
- **3.2 Choose geometric part and mesh models**
- **3.3 Set default mesh parameters** (<u>important</u>: set `base size` sensibly)
- **3.4 Set any mesh custom controls** (`Automated Mesh > Custom Controls`)
- **3.5 Generate volume mesh** (button on toolbar)

4. Define fluid continuum and model equations
- **4.1 <u>If</u> it doesn't exist, create it** (`Continua` → `New > Physics Continuum`)
- **4.2 Choose model equations** (`Continua >` *physics* → `Select Models`)

5. Define boundary conditions (in `Regions`)
- **5.1 Set any inflow boundary properties**
- **5.2 Set any other non-default boundary properties**

6. Set up any reports, monitors, plots or scenes used to check progress of simulation

7. Set stopping criteria (`Stopping Criteria` → `Create New Criterion`)

8. Run (button on toolbar)

9. Analysis and plotting (reports/derived parts/scenes/plots …)

1.2 Choice of Mesh Models

For this coursework use the following mesh models:

- Surface Remesher
- Polyhedral Mesher
- Prism Layer Mesher

`Base size` and `prism layer` parameters take global values except where overridden using `custom controls`. The prism-layer option puts thin prismatic cells near `wall` boundaries, so boundary types must be correctly identified – at least as wall or non-wall – before meshing.

1.3 Choice of Model Equations

For this coursework uncheck the "`Auto-select`" box and use the following model physics:

- Three Dimensional
- Gas
- Steady
- Segregated Flow
- Constant Density
- Turbulent
  – Reynolds-Averaged Navier-Stokes (RANS)
  – K-Epsilon Turbulence / Standard K-Epsilon / High y^+ Wall Treatment

1.4 Convergence Criteria

For this coursework set stopping criteria to end the calculation automatically when normalised residuals for mean-flow variables (continuity and x, y, z momentum) are all below 10^{-4}. If necessary, either increase the default maximum number of iterations or disable that criterion.

1.5 Reports

These include forces, moments, coefficients, max and min values, fluxes, areas etc.

- **Create:** (`Reports` → `New Report`)
- **Set the parts** to which the report is to be applied;
- **Set any other report properties**
- **Run the report:** right-click and select `run`. The result appears in the output window.
- Optionally, set monitors and plots from a right-click option.

1.6 Export

<u>Graphical Output</u>
Export field plots ("`Scenes`") and line graphs ("`Plots`") to file by right-clicking on an unfilled area of the plot window (or on the name in the object tree) and choosing `Hardcopy` (or `Hardcopy to Clipboard`).

<u>Tables</u>
Tables (`Tools > Tables`) can be extracted and exported as comma-separated-variable (CSV) files, then imported into other software for plotting / analysis.

1.7 Field Functions

Field functions (`Tools > Field Functions`) use intrinsic or user-defined variables designated by one dollar sign for scalars (e.g. `$Pressure`) or two dollar signs for vectors (e.g. `$$Velocity` for the whole vector, or `$$Velocity[2]` for the 2 component).

Field-function scripting is similar to C and related programming languages. Note in particular:

- arrays are **zero-indexed**; e.g. vector components are numbered 0, 1, 2, not 1, 2, 3;
- names are **case-sensitive**; e.g. `$Time` and `$time` are not the same;
- exponents are obtained by a `pow()` function and not by an operator.

Important variables which may enable you to code field functions for inflow profiles, etc., are:

- `$$Position[0]`, `$$Position[1]`, `$$Position[2]` for x, y, z respectively.
- `$Time` for time, t.

2. ASSIGNED EXERCISE: Wind Loading

2.1 Set-Up

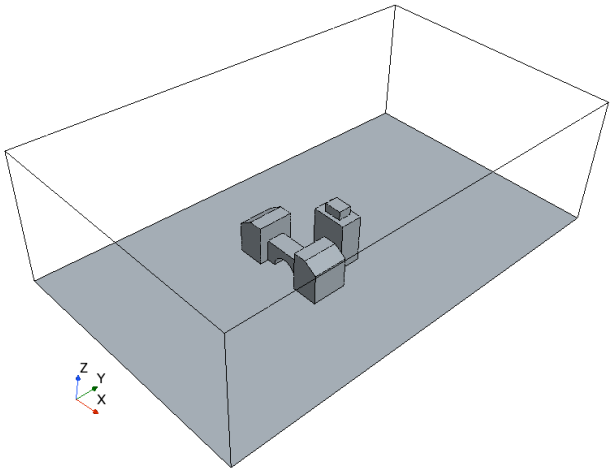

Use the inbuilt `STAR-CCM+` CAD module to create the building complex shown. (See the Appendix for dimensions).

The fluid domain is generated by subtracting the buildings and tower from an outer cuboid of dimensions

$$-60 < x < 60\,, \quad -80 < y < 120\,, \quad 0 < z < 60$$

Dimensions are in metres. The origin and cardinal directions are defined in the Appendix. Positive x and positive y should correspond to east and north, respectively; **please adhere to this coordinate system.**

Assign boundary types:

`Velocity Inlet`	on south; initially, set velocity 20 m s^{-1}, turbulent intensity 0.05, turbulent viscosity ratio 100; later, you will use a field function to specify inlet velocity;
`Outlet`	on the north;
`Symmetry plane`	on west, east and top;
`Wall`	on buildings, bridge and ground.

Create separate wall boundaries for each of the two distinct buildings and the bottom boundary.

Generate a polyhedral mesh (base size 5 m) with prism sublayer (4 layers; total thickness 1 m) and surface growth rate 1.05. Apply custom controls to the buildings and tower: surface size (target 10% of base, minimum 1% of base) and prism layer (total thickness 0.2 m).

Use the model equations described in Section 1.3 above.

Use the stopping criteria described in Section 1.4 above.

If it continues to occur after initial transients, a run-time warning that turbulent eddy viscosity has been limited can be prevented by increasing the allowed ratio (by, say, a couple of orders of magnitude) at

`Solvers > K-Epsilon Turbulent Viscosity`

The pressure coefficient is the local non-dimensional pressure, defined as

$$c_p = \frac{p - p_{\text{ref}}}{\frac{1}{2}\rho U_0^2}$$

and is a built-in field function (`Tools > Field Functions`). Set reference density (as defined in the `Continua`) and reference velocity (as the inflow velocity) in its properties window. p_{ref} can be left as 0.

Forces, moments and max/min pressure coefficients each require a `Report`.

In the last part of this exercise define a field function (`Tools > Field Functions`) to supply the magnitude of velocity on the inflow boundary via the power law:

$$U = U_0 \left(\frac{z}{10}\right)^{1/5}, \qquad U_0 = 20\ \text{m s}^{-1}\ (= \text{reference velocity})$$

2.2 Items to Submit

Upload only the following two items (in PDF format) to Blackboard. You will be penalised if:

- you include padding, such as unnecessary plots, explanations or repetition of instructions;
- you use a screenshot where a simple text statement would do;
- you use non-PDF format or more separate files;
- your main submission exceeds 7 pages.

<u>Item 1: Main Submission</u>

(1) A clipped region from a screen shot showing the feature tree for the CAD modeller.

(2) A statement of how many cells, faces and vertices are used.

For uniform velocity at inflow:

(3) A graph of residuals history.

(4) One appropriate plot (use your judgement) for each of the following:
- building geometry;
- mesh;
- velocity vectors on the horizontal plane $z = 2$ m;
- velocity vectors on the streamwise vertical plane $x = 0$ m;
- streamlines (starting from an upstream horizontal line 2 m above ground);
- shaded plot of the pressure coefficient on the buildings and ground.

(5) The maximum and minimum pressure coefficients on building B.

(6) The streamwise force and the overturning moment for building B.

For the power-law mean-velocity profile at inflow:

(7) The field-function script (i.e. the text you typed in to define the magnitude of velocity)

(8) Velocity vectors on the streamwise vertical plane $x = 0$ m.

(9) The maximum and minimum pressure coefficients on building B.

(10) The streamwise force and the overturning moment for building B.

<u>Item 2: StarCCM+ Summary Report</u>

The summary report for the calculation (`[File]` ↓ `Summary Report > To File…`) should be created *after* doing all of items (1-10), so that all your working is included. Make sure that the file submitted to Blackboard is in PDF format.

APPENDIX: GEOMETRY

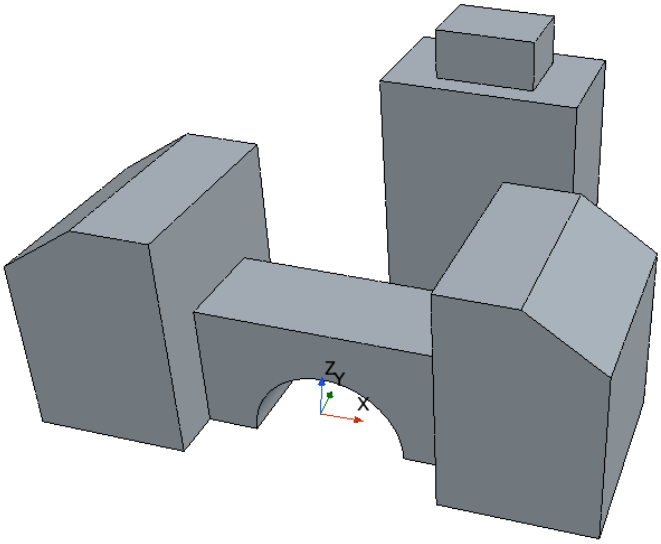

All dimensions are in metres. Building A has two planes of symmetry, with the origin at their ground-level crossing point.

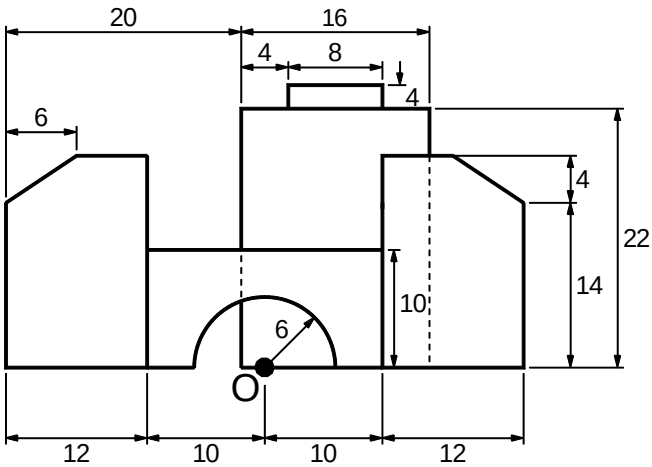

ELEVATION

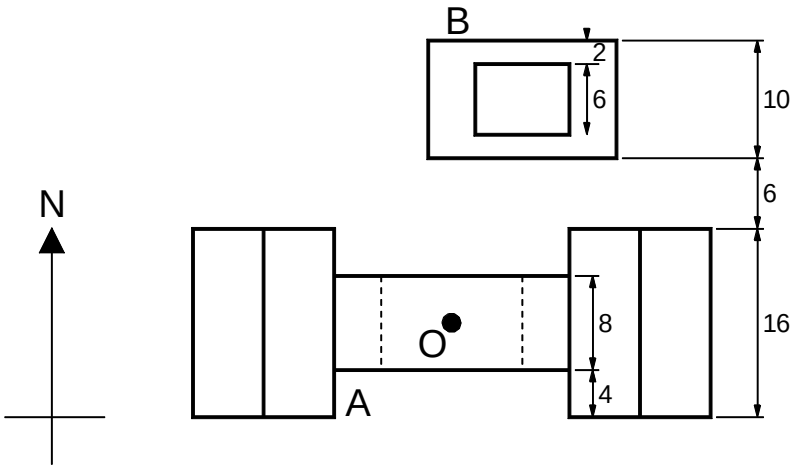

PLAN