Corrosion Science, Vol. 27, No. 1, pp. 103–106, 1987
Printed in Great Britain

0010–938X/87 $3.00 + 0.00
Pergamon Journals Ltd.

SHORT COMMUNICATION

A SEMI–AUTOMATIC DEVICE FOR THE RAPID MEASUREMENT OF PIT–DEPTHS AND POSITIONS

R.A. COTTIS* AND D. HOLT,

Corrosion and Protection Centre, University of Manchester Institute of Science and Technology, P.O. Box 88, Sackville Street, Manchester M60 1QD, United Kingdom·

Abstract – A device has been developed which allows the rapid measurement of pit depth and position on a flat sample. The probe positioning is controlled manually, but the remainder of the measurement is under computer control, permitting rapid data acquisition in a form suitable for further processing.

Introduction

As part of a programme concerned with the study of the statistical distribution of pit–depths developed during the site and laboratory corrosion of austenitic stainless steels in chloride solutions it was necessary to measure the depths of approximately 50,000 pits. The pit depths were in the range 0–2.5 mm, and the sample dimensions were approximately 150 x 100 mm. For completeness, and to assist in the measurement by providing a display of pits already measured, the position of the pit on the plate was also determined. By the use of the semi–automatic system described herein it was possible to make measurements in less than 10 seconds for each pit, the resultant data being directly recorded on magnetic tape for further analysis.

Pit Depth Measurement

The apparatus uses a simple mechanical device to probe into the pit (figure 1), with a flat–ended transparent Perspex tube around the probe acting as a reference on the uncorroded metal surface. The pitting conditions used for this work gave clean, open pits which were free of corrosion product, so it was possible to make the measurements without any additional cleaning, and without problems due to undercutting of pits with very small mouths. Clearly it would not be possible to use this technique with certain of the more complex pit morphologies. The position of the probe relative to the Perspex tube was measured with a conventional linear variable differential transformer (LVDT), model Penny and Giles LVDT DS1354, with internal electronics which resulted in a d.c. output from the LVDT which was proportional to the voltage supplied to it, and to the probe position.

Position Measurement

The x–y position of the measuring probe on the sample was determined by connecting the probe to a fixed pivot by way of two pivoted arms (figure 2). By using rotary potentiometers for the pivots, the angle of each arm could be determined, and, with the aid of some elementary trigonometry, the position of the probe calculated.

The raising and lowering of the probe onto the surface of the sample was achieved simply by using thin aluminium strips for the measuring arms, such that the probe could be raised by

Manuscript received 5 September 1986.

slight elastic flexing of the arms.

The lengths of the measuring arms and the position of the sample plate relative to the fixed pivot were selected to optimize the accuracy of the position measurement.

Measurement and Control

The measurement was controlled by a BBC model B microcomputer. This has the advantage of a built−in 4 channel, 12−bit analogue−to−digital converter (ADC), so that all of the required measurements could be made without additional electronics. The built−in ADC does have some limitations however, and several precautions were necessary to obtain reasonable results. While the ADC has nominally 12−bits of resolution, the particular device used is generally found to be rather noisy. Consequently, all readings were repeated several times and the average value taken. In addition, the reference voltage for the ADC is taken from a series−connected pair of forward−biased silicon diodes. The value of the reference voltage is consequently very temperature sensitive. This was compensated for on the measurement of probe depth by measuring the voltage of the energizing supply (+ 5V obtained from the BBC) with the spare fourth channel of the ADC.

As the input range of the ADC is limited by the reference voltage of about 1.4V, potential dividers were used to reduce the LVDT output and the +5V supply to this range while the measuring potentiometers were fed from the reference voltage supply from the BBC computer.

A schematic diagram of the electronic circuitry is shown in figure 3. Figure 4 shows a plotted version of the screen display obtained during measurement of pit depths, with different symbols being used to designate pits of different depths. Figure 5 shows a histogram of pit depths derived from the same data. Clearly the further processing which might be undertaken is limited only by the user's imagination. Examples would be the determination of spatial correlation, fitting of the data to a suitable distribution function or calculation of the parameters of the relevant extreme value distribution.

Calibration and Errors

The calibration of the measuring probe was supplied by the manufacturer of the LVDT, and was checked with the aid of slip gauges of known thickness. It is expected that the error in this measurement is limited by the resolution of the ADC and the linearity of the LVDT. The estimated error in measurement is ± 0.1% of full scale, or ± 10 μm for the 10 mm LVDT used in this work.

Calibration of the x−y position of the probe was achieved by positioning the probe at two fixed points on the measuring surface, corresponding approximately to the opposite corners of the specimen. The angles of the two pivot points are known for these two positions, consequently this procedure defined the voltage−angle calibration for each pivot. The relationship between output voltage and probe angle was assumed to be linear.

The errors in the determination of the x−y position derive from the uncertainty in the lengths of the measuring arms, potentiometer linearity errors and calibration positioning errors (potentiometer value errors are eliminated in the calibration procedure).

The estimation of errors in the position measurement is somewhat complex because of the interaction between the sources of error and the calibration procedure. A practical estimate was obtained by measuring the position of a series of points on a sheet of graph paper, and from this it was estimated that the errors in position measurement were of the order of ± 1 mm. This was adequate for the purposes of this work, but a more careful analysis and correction procedure might be necessary if more accurate position measurements are required.

Acknowledgements

During the development of this device one of the authors (DH) was supported by a Royal Society Industrial Fellowship and by Graham Miller and Co. Ltd.

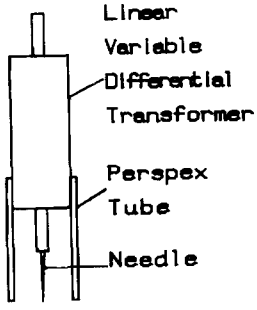

Figure 1 Measuring Probe.

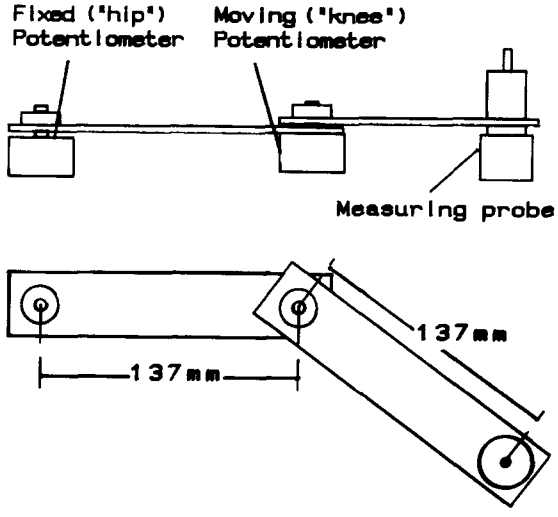

Figure 2 Measuring Arm Configuration

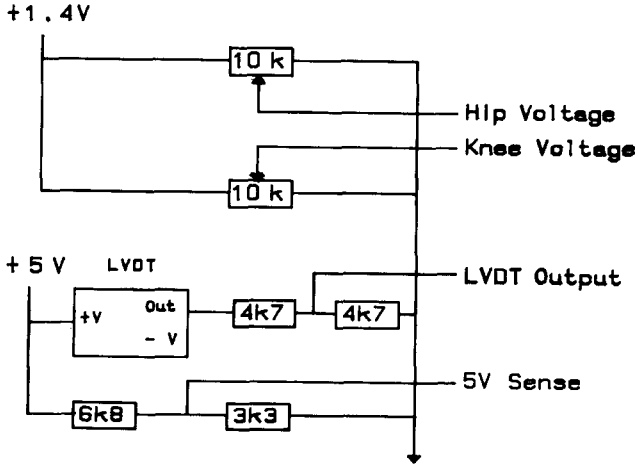

Figure 3 Schematic Circuitry of Measuring Electronics.

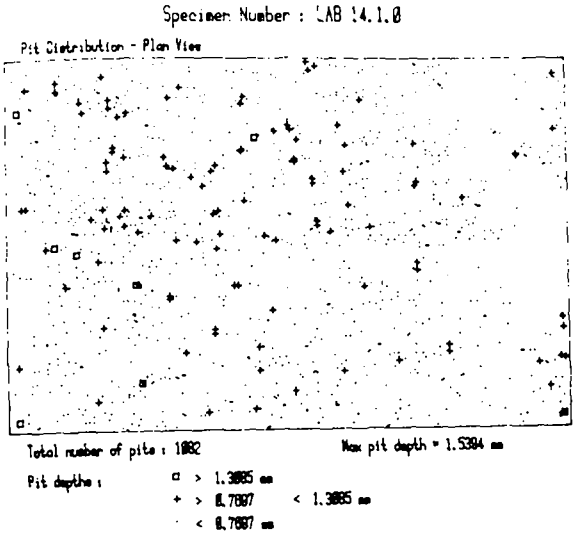

Figure 4 Typical Display of Pit Depth and Position.

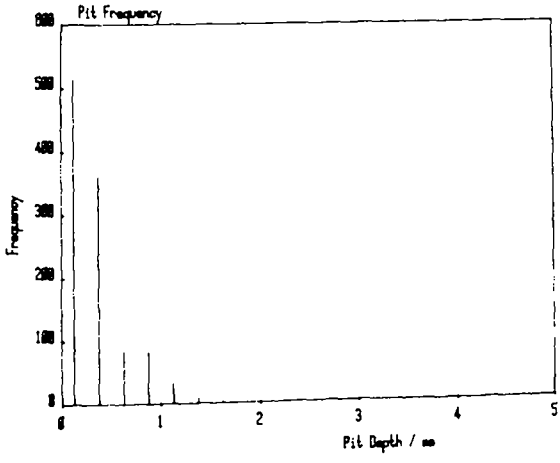

Figure 5 Histogram of Pit Depths from Figure 4.