Revision Exercises

Q1.
A long bridge with piers 1.5 m wide, spaced 8 m between centres, crosses a river. The depth of water upstream is 1.6 m and between the piers is 1.45 m. Calculate the volume flow rate under one arch, assuming that the river bed is horizontal, the banks are parallel and frictional effects are negligible. Find the maximum height to which water rises at the front of the piers.

Q2.
A pipe carrying oil with specific gravity 0.75 tapers from diameter 0.5 m at A to 0.3 m at B, which is 5 m above A. The velocity may be assumed uniform at both points and friction may be neglected. If the velocity and gauge pressure at A are 2 m s^{-1} and 120 kPa, respectively, calculate the gauge pressure at B.

Q3.
A jet of fluid flows smoothly onto a stationary curved vane which turns it through 45°. The initial jet has diameter 40 mm and uniform velocity 25 m s^{-1}. The exit jet may be assumed to have uniform velocity 20 m s^{-1}. Calculate the net force on the vane.

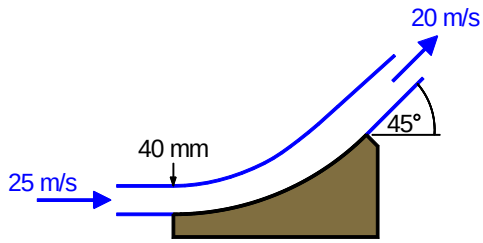

Continuity and Momentum For Non-Uniform (2-D) Velocity Profiles

Q4.
A gate is used to control the flow of water in a square-section duct of side $h = 0.3$ m (see figure below). The upstream flow is uniform, with velocity U_0. A short distance downstream of the gate the velocity profile can be approximated by

$$u(y) = \begin{cases} 3 + \cos(2\pi y/h)\ , & \text{if } y \le h/2 \\ 2\ , & \text{if } y > h/2 \end{cases}$$

where u is the velocity in m s^{-1} and y is the distance from the floor of the duct in m.

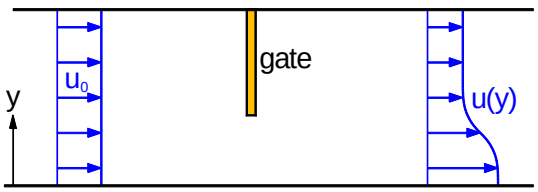

(a) Find the upstream velocity, U_0.
(b) If the hydrodynamic force on the gate is 400 N, find the pressure drop between the upstream and downstream sections shown (neglecting drag on the duct walls).
(c) Hence, deduce a pressure loss coefficient for the gate in this position.

Q5. (Exam 2021)

Water flows through a sloping pipe, as illustrated. A U-tube manometer is connected to the pipe between sections A and B, respectively upstream and downstream of an orifice plate. Both the pipe and the orifice have circular cross-sections. The specific gravity of the manometer fluid is 3.1.

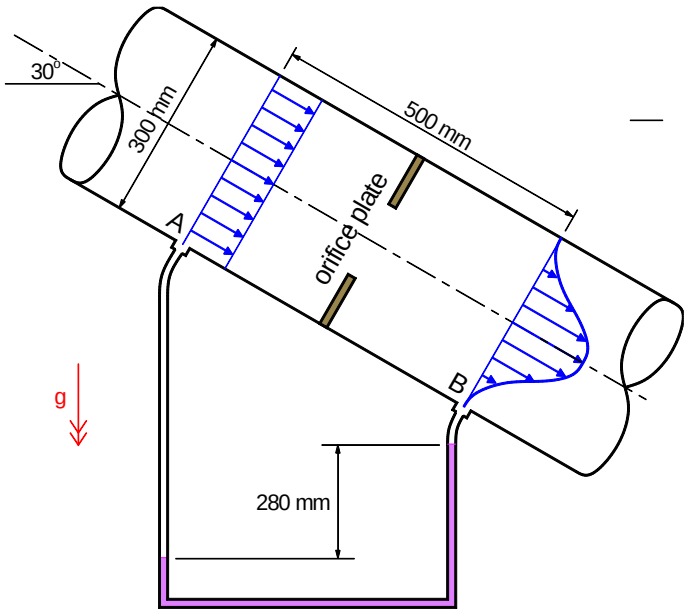

(a) Assuming that the piezometric pressure is uniform over any cross-section of the pipe, calculate the difference between the piezometric pressures at A and B.

At section A the axial velocity u_A can be assumed to be uniform, whereas at section B the axial velocity profile can be approximated by the following equation:

$$u_B = \frac{u_0}{2}\left[1 + \cos\left(\frac{\pi r}{R}\right)\right]$$

where r is the distance from the centreline of the pipe, R ($= 0.15$ m) is the radius of the pipe and $u_0 = 2.1\ \mathrm{m\ s^{-1}}$.

(b) Find the velocity u_A at section A.

(c) Neglecting friction on the pipe wall, calculate the drag force on the orifice plate.

(d) Using the average velocity in the pipe as the reference velocity, determine the head-loss coefficient of the orifice plate.

Note: one or more of the following integrals may be of use:

$$\int_0^R \left\{1 + \cos\left(\frac{\pi r}{R}\right)\right\} \mathrm{d}r = R \qquad \int_0^R \left\{1 + \cos\left(\frac{\pi r}{R}\right)\right\} r\ \mathrm{d}r = \left(\frac{1}{2} - \frac{2}{\pi^2}\right) R^2$$

$$\int_0^R \left\{1 + \cos\left(\frac{\pi r}{R}\right)\right\}^2 \mathrm{d}r = \frac{3R}{2} \qquad \int_0^R \left\{1 + \cos\left(\frac{\pi r}{R}\right)\right\}^2 r\ \mathrm{d}r = \left(3 - \frac{16}{\pi^2}\right)\frac{R^2}{4}$$

Q6.
A long T-shaped element, of depth $h/4$ and oriented symmetrically as shown, spans a wind-tunnel duct of depth $2h$, where $h = 0.2$ m. The velocity upstream is uniform: $U_0 = 40$ m s^{-1}. The velocity distribution is measured at a position downstream and is found to be

$$u(y) = U_{\max}\left[1 - \frac{1}{2}\left(1 - \frac{y^2}{h^2}\right)^2\right]$$

where y is the distance from the centreline in m.

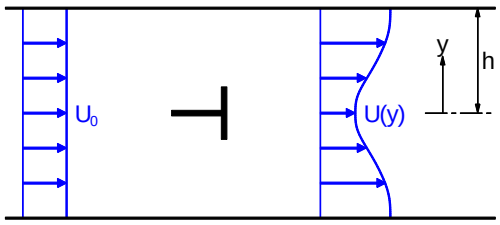

(a) Sketch the expected pattern of flow around the T-shaped element, indicating, in particular, separation and reattachment points, recirculating flow regions and the direction of flow.
(b) Calculate $U_{\max}$.
(c) If the pressure drop from the upstream to the downstream section is 200 Pa, find the force per unit span on the T-shaped element.
(d) Define a suitable drag coefficient for the element and calculate its value.

Q7.
A hydraulic jump occurs in an open channel of width 1.0 m (see figure). Upstream of the jump the depth is 0.1 m and the velocity is U_A (uniform). The velocity profile just downstream of the jump is of the form

$$u = \frac{U_B}{2}\left(1 + \cos\frac{\pi y}{D}\right)$$

where u is the velocity at a distance y from the bed of the channel, U_B is the velocity near the bed and D (= 0.8 m) is the depth downstream of the jump.

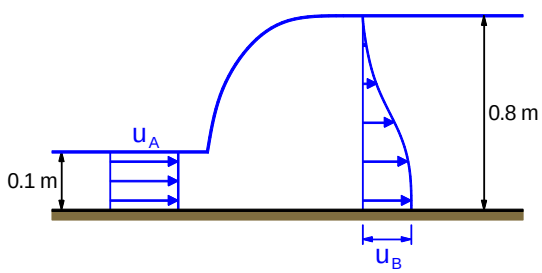

(a) Determine U_B, leaving your answer as a function of U_A.
(b) Calculate the difference between the hydrostatic pressure forces on the fluid cross-sections upstream and downstream of the jump.
(c) Neglecting viscous stresses on the channel bed or the free surface, use the momentum principle to find the upstream velocity U_A.

Q8.

Air of density ρ flows past a smooth flat plate of length L and large span, and a laminar boundary layer of thickness δ develops on each side. The upstream velocity may be assumed to have the uniform value U_0, whilst the downstream velocity profile has the form

$$\frac{u}{U_0} = \begin{cases} 2\dfrac{y}{\delta} - \left(\dfrac{y}{\delta}\right)^2, & \text{if } y \le \delta \\ 1, & \text{if } y \ge \delta \end{cases} \qquad (*)$$

where y is the distance perpendicular to the plate. There is negligible pressure change along the length of the plate.

A suitable control volume to analyse the problem is shown below. Depth H is any depth greater than the downstream boundary-layer thickness δ and cancels during your working.

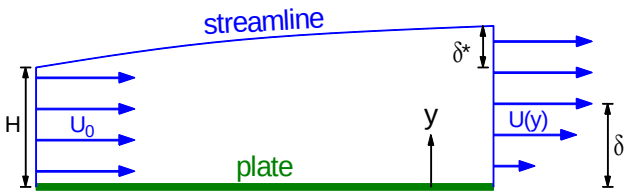

(a) Use continuity to calculate the apparent displacement of streamlines, δ^* (this is called the *displacement thickness*), as a function of boundary-layer depth δ.

(b) Calculate the difference between momentum fluxes (per unit span) at inlet and outlet of the control-volume shown.

(c) Hence deduce the viscous drag force (per unit span) on one side of the plate.

(d) Noting that there is a boundary layer on both sides of the plate, define a suitable overall drag coefficient and calculate its value.

(e) If the flow is laminar, with dynamic viscosity μ, and the velocity profile is given by equation (*), write an expression for the wall shear stress.

All answers should be left as functions of the parameters ρ, μ, U_0, L, and δ.

Q9.

A sluice gate controls the flow in a wide channel (see figure) with negligible slope. The depth of water just downstream is 0.3 m and the velocity profile is adequately approximated by

$$u = 5\left(\frac{y}{0.3}\right)^{1/7}$$

where u is the velocity in m s^{-1} and y the distance from the bed in m. The upstream velocity is uniform, 0.8 m s^{-1}.

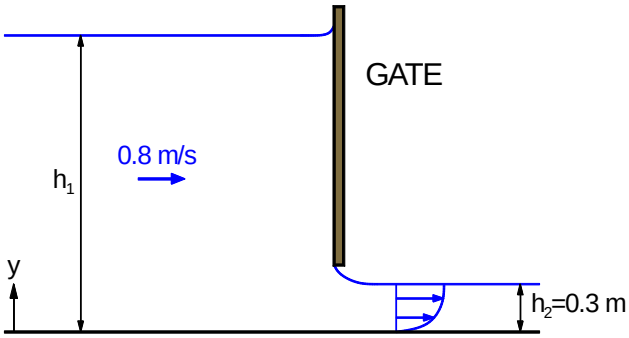

(a) Calculate the volumetric flow rate (per metre width).
(b) Find the upstream depth, h_1.
(c) Calculate the upstream and downstream momentum fluxes (per metre width).
(d) By assuming hydrostatic pressure upstream and downstream, and neglecting bed friction, find the force (per metre width) on the gate.

Q10.

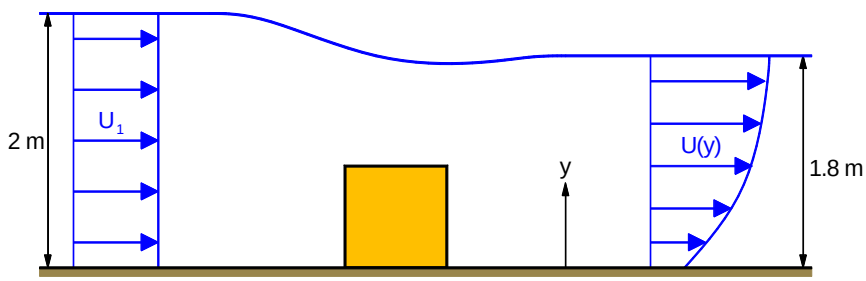

A 2-d flow of water passes over a wide rectangular block. Upstream of the block the velocity is uniform, U_1 with depth 2 m. A short distance downstream of the block the depth is reduced to 1.8 m and the velocity profile is

$$u = 1.5 + \tanh y$$

where u is the velocity in m s^{-1} and y is the distance from the bed of the channel in m.

(a) Find the volume flow rate per metre span and hence the value of U_1.
(b) Assuming hydrostatic pressure upstream and downstream calculate the force per metre span on the block.

Q11. (Exam 2019)

The figure illustrates a junction in a duct. Water enters at A with uniform velocity and exits to atmosphere at B and C. The cross-section of the junction is rectangular with uniform spanwise width 2 m. The flow rate and pressure at A are, respectively, $Q_A = 1.5\ \mathrm{m^3\ s^{-1}}$ and $p_A = 4.5$ kPa. The velocity profile at B can be assumed to be uniform.

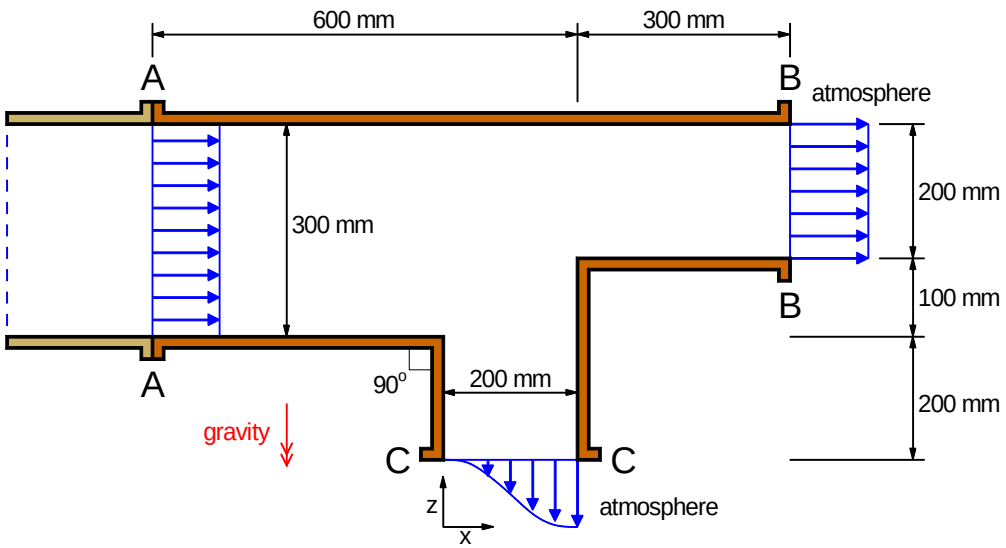

(a) Determine the velocity of the flow at A.

(b) If the horizontal (x-direction) force that the fluid exerts on the junction is $F_x = 3200$ N, determine the velocity of the flow at B.

The velocity profile at C is given by

$$u_C = \frac{U_{\max}}{2}\left[1 - \cos\left(\frac{\pi x}{0.2}\right)\right]$$

Where x is the horizontal distance in metres from the left wall at C (see the figure) and $U_{\max}$ is the maximum velocity in m s^{-1}. Determine:

(c) the velocity $U_{\max}$ at section C;

(d) the vertical (z-direction) force on the junction.

Q12. (Exam 2022)

A two-dimensional water jet impinges on a wedge with tip angle 60°, symmetrically with respect to a vertical plane as illustrated. Far upstream, the jet has uniform velocity $U_0 = 3.5\ \mathrm{m\ s^{-1}}$ and thickness $h_0 = 10\ \mathrm{mm}$. As a result of wall friction, boundary layers with the following velocity profile are developed:

$$u(y') = U_0 \sin\left(\frac{\pi y'}{2\delta}\right)$$

where δ is the thickness of the boundary layer and y' is the distance from the surface of the wedge.

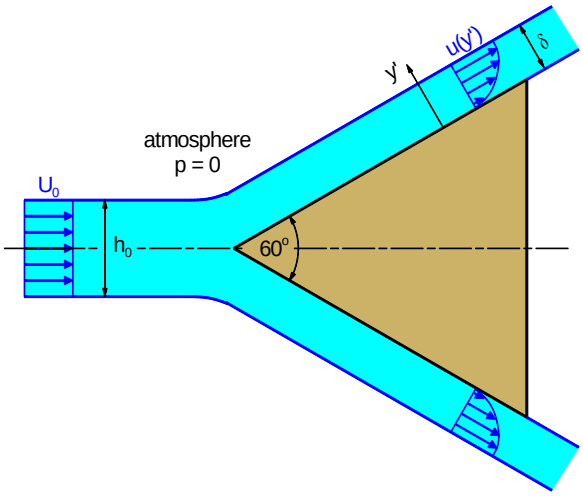

(a) Calculate the pressure on the tip of the wedge, stating any assumptions that you have made.

(b) Determine the thickness of the boundary layer, δ.

(c) Determine the drag force per unit depth on the wedge.

(d) Using the velocity profile in the boundary layer, and assuming that water has viscosity $\mu = 0.001$ Pa s, determine the viscous shear stress on the surface of the wedge.

Continuity and Momentum For Non-Uniform (Axisymmetric) Velocity Profiles

Q13.
A pipe of radius R has a solid cylindrical core of radius $R/2$ (see below). The fully-developed laminar flow between inner and outer cylinders is axisymmetric, with velocity profile

$$u = \frac{GR^2}{4\mu}\left[a \ln\frac{r}{R} + b - \left(\frac{r}{R}\right)^2\right]$$

where u is the velocity, r is the distance from the centreline, G is the magnitude of the pressure gradient and μ is the dynamic viscosity. a and b are constants to be determined.

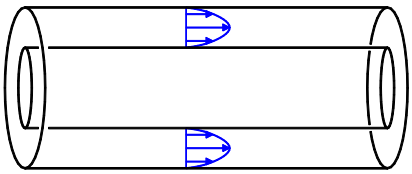

(a) Use the no-slip condition at inner and outer walls to find the values of a and b.
(b) Find expressions (in terms of G and R) for wall shear stress τ_w on inner and outer walls.
(c) Find an expression (in terms of G, R and μ) for the volume flow rate, Q.
(d) Hence, relate the head loss h along a length L to the volume flow rate.

The following integral may be useful:

$$\int x \ln x \; \mathrm{d}x = \frac{1}{2}x^2(\ln x - \frac{1}{2}) + \text{constant}$$

Q14.
An axisymmetric jet of water impinges normally on a flat plate. The velocity profile in the jet is given by

$$u = \begin{cases} 8(1 - 300r^2 + 2000r^3\,, & \text{if } r \le 0.1 \\ 0\,, & \text{otherwise} \end{cases}$$

where u is the velocity in m s^{-1} and r is the distance from the centerline of the jet in m. After impingement the water spreads radially, parallel to the surface of the plate.

(a) Find the volume flow rate of water in the jet.
(b) Find the force on the plate.
(c) Estimate the maximum pressure at the stagnation point, stating any assumptions you have made.

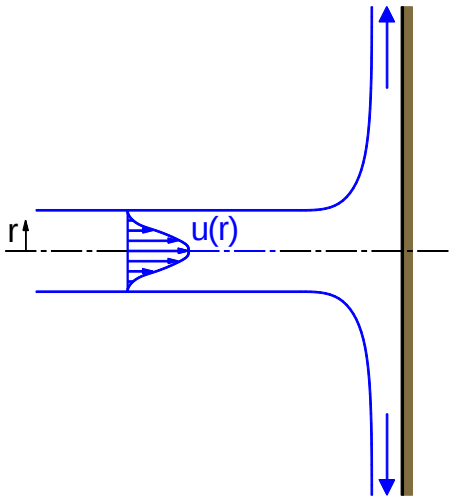

Q15.
Water flows through a contraction at the end of a horizontal pipe of initial diameter 1.8 m. The diameter at the exit is 1.0 m. The flow exhausts into atmosphere. The velocity distribution across a radius of the pipe immediately upstream of the contraction is as follows:

Radius (mm)	0	250	500	675	800	875	900
Velocity (m s^{-1})	3.0	2.92	2.67	2.34	1.89	1.14	0.0

The velocity at the exit is uniform.

(a) What is the velocity at the exit?
(b) If the pressure upstream is 30 kPa what is the force exerted on the contraction?

Tank Filling and Emptying

Q16.
A trough has rectangular cross section (0.6 m wide × 0.8 m deep) and length 2 m. It is being continuously filled with water via a hose at a rate of 1.5 L s^{-1}, whilst water leaks from a hole at the bottom with area 8×10^{-4} m^2. The latter can be treated as an orifice with discharge coefficient $c_d = 0.6$.

(a) Write a numerical expression for the quantity of flow Q (in m^3 s^{-1}) leaking from the bottom of the trough as a function of water depth h (in m).
(b) Show that the inflow and outflow rates are such that the trough can *not* fill to the brim.
(c) Find the maximum depth to which the trough can fill.
(d) Find the time taken to fill the trough to half the depth in part (c).

Q17.
A trough has prismatic form with parabolic cross-section $y = x^2$ (y and x are vertical and horizontal coordinates in metres), length 0.5 m and total depth 0.5 m. It is being continuously filled from a hose at a rate of 0.3 L s^{-1}, whilst water leaks from a small hole at the bottom with area 10^{-4} m^2. The latter can be treated as an orifice with discharge coefficient $c_d = 0.6$.

(a) Write an expression for the quantity of flow Q out of the bottom of the trough as a function of the water depth, h; include numerical values and state units for Q and h.
(b) Show that inflow and outflow rates are such that the trough *will* fill to the brim.
(c) Write an expression for the water surface area as a function of water depth h.
(d) Determine how long it takes to fill the trough.

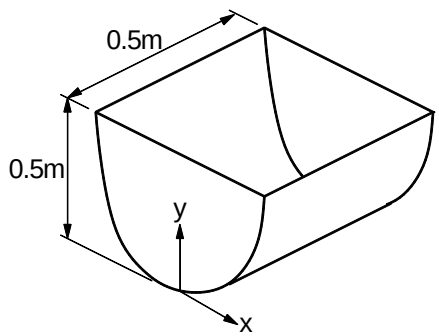

Q18.
A steep-sided reservoir has a constant surface area 0.3 km^2 and discharges over a weir of length $b = 4$ m. The discharge relationship (discharge, Q, as a function of height over the sill, h) for the weir is

$$Q = 1.8bh^{3/2}$$

where Q is in m^3 s^{-1} and b and h are in m. The initial depth of water over the sill of the weir is 0.4 m. If there is negligible inflow to the reservoir, find the time to reduce this depth to 0.2 m.

Q19.
A circular tank, 4 m in diameter and open to the atmosphere at the top, is supplied with water through a horizontal pipe 150 m long and 200 mm diameter. A pump feeds the pipe and maintains a constant gauge pressure of 120 kPa at the entry to the pipe. The pipe may be assumed to have a constant friction factor $\lambda = 0.02$ and losses other than those due to wall friction may be neglected.

(a) What is the piezometric head maintained by the pump at the inlet to the pipe?
(b) Write an expression for the frictional head loss along the pipe due to a volumetric flow rate Q.
(c) Hence find an expression for Q when the water level in the tank is a height h above the pipe.
(d) Find the time taken to raise the level of water in the tank from 2 m to 7 m above the pipe.